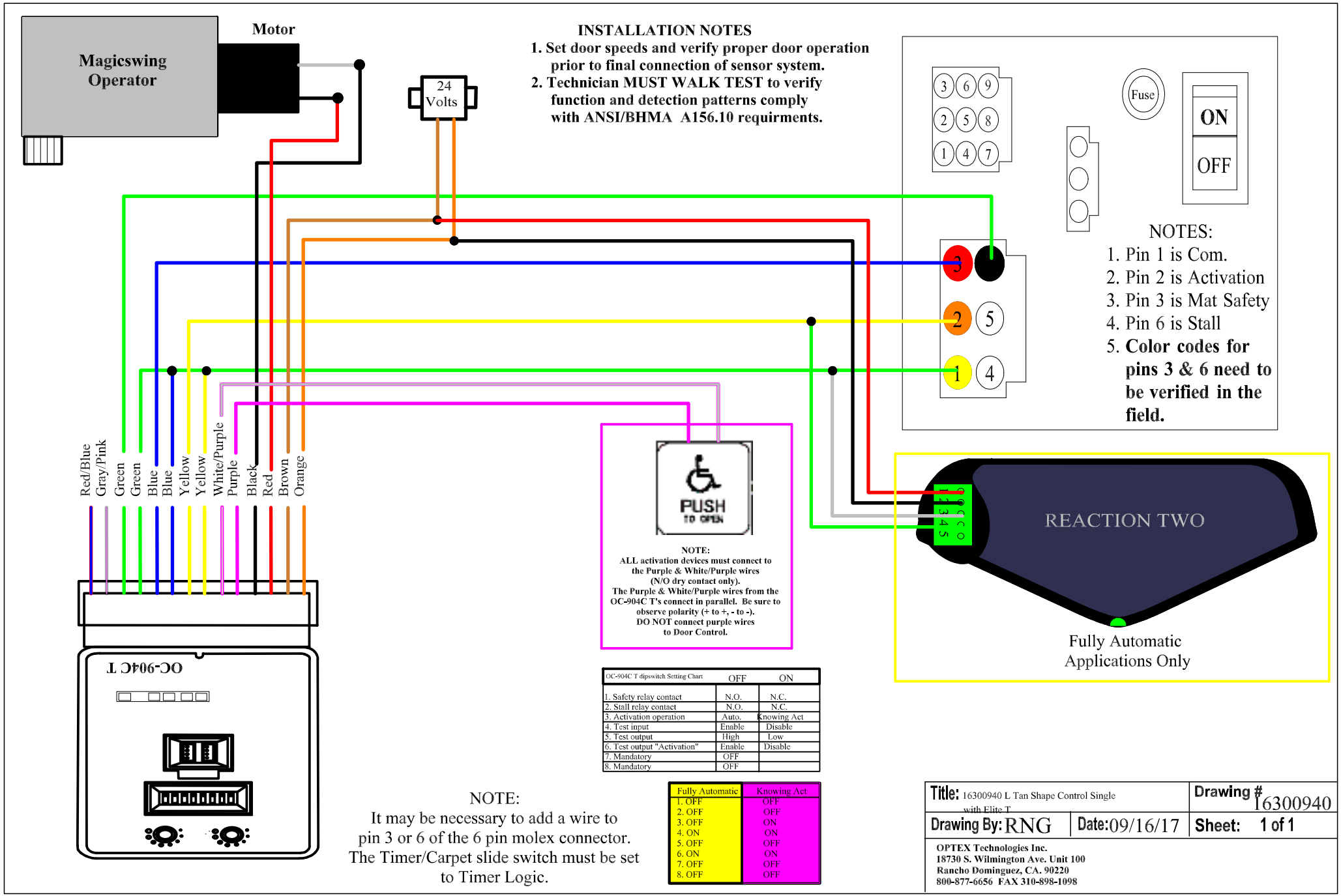

OC-904C T dipswitch Setting Chart	OFF	ON
1. Safety relay contact	N.O.	N.C.
2. Stall relay contact	N.O.	N.C.
3. Activation operation	Auto.	Knowing Act
4. Test input	Enable	Disable
5. Test output	High	Low
6. Test output "Activation"	Enable	Disable
7. Mandatory	OFF	
8. Mandatory	OFF	

Fully Automatic	Knowing Act
1. OFF	OFF
2. OFF	OFF
3. OFF	ON
4. ON	ON
5. OFF	OFF
6. ON	ON
7. OFF	OFF
8. OFF	OFF